Under Cabinet Range Hoods User Manual

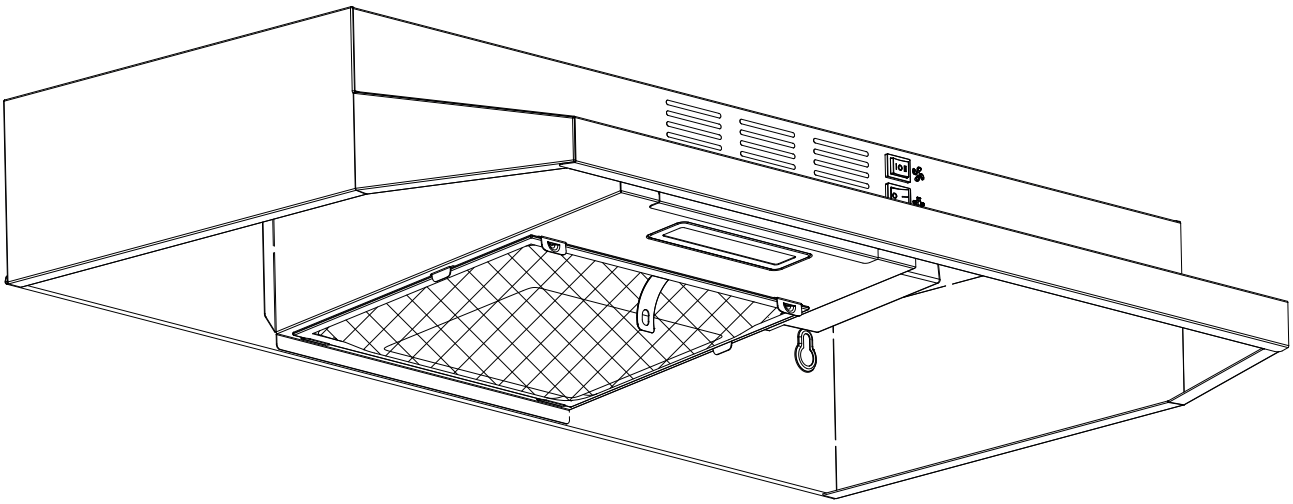

Model numbers:
OV-1011R / OV-1031 / OV-1012RWH / OV-1032

Scan this QR code to watch the installation video or to visit the product page

FOR RESIDENTIAL USE ONLY

UM1011R/12RWH

INSTALLERS - Start Here

Safety Instructions are on pages 4 and 5 and Installation Instructions are on pages 8 to 14.

Please perform these steps:

1. Read the safety instructions.
2. Read all instructions in the Installation section of this manual BEFORE installing the range hood.
3. Remove all packing materials.
4. When finished, make sure to leave these instructions with the consumer.
5. Installation is to be done by a qualified technician only. However, the ultimate responsibility for proper installation falls to the owner.
6. Product failure due to improper installation is not covered under the Warranty.

CONSUMERS - Start Here

Safety Instructions are on pages 4 and 5 and Operating Instructions are on pages 15 to 17.

Please perform these steps:

1. Read the safety instructions.
2. Read all instructions in the manual BEFORE operating the range hood.
3. Remove all packing materials.
4. Installation is to be done by a qualified technician only. However, the ultimate responsibility for proper installation falls to the owner.
5. Product failure due to improper installation is not covered under the Warranty.

Hardware Note: For safety reasons, range hood mounting screws and anchors will not be included due to the variation of cabinetry constructions and wall material. Please consult your installation specialist regarding the optimal type of mounting screws and wall anchors to suit your home's construction.

Table of Contents

Before You Begin 2
Table of Contents 3
Important Safety Information 4-5
Included Parts 6
Range Hood Dimensions 7
Specifications 7
Installation 8
- Step 1 - Read the Safety Instructions 8
- Step 2 - Unpack Range Hood and Prepare Tools 8
- Step 3 - Plan Desired Location 8
- Step 4 - Test Unit Functions 8
- Step 5 - Venting Installation Guidelines 9-10
- Step 6 - Preparations 11
- Step 7 - Remove Accessories 11
- Step 8 (External Ventilation Only) - Attaching Vent/Damper and Panel Piece 12
- Step 9 - Electrical Connection 13
- Step 10A - Wall installation 14
- Step 10B - Under the cabinet installation 14
- Step 11 (External Ventilation Only) - Venting 14

Range hood assembly 15
Assembly 16
Operation 17
- Power 17
- Light 17

Troubleshooting 17
Maintenance 18
- Range Hood Cleaning 18
- Replacing the Light 18

Use and Care Information 19

Important Safety Information

READ ALL INSTRUCTIONS BEFORE USE

Read and follow all instructions before using the range hood to prevent the risk of fire, electric shock, personal injury, or damage when using the range hood or appliances with the range hood. This guide does not cover all possible conditions that may occur. Always contact your service technician or manufacturer about problems that you do not understand.

- The installation in this manual is intended for qualified installers, service technicians or persons with a similar qualified background. Installation must be done by qualified professionals and in accordance with all applicable codes and standards, including fire-rated construction.
- The range hood may have very sharp edges; please wear protective gloves if it is necessary to remove any parts for installing, cleaning or servicing.
- Activating any switch to ON position before completing installation may cause damage or electric shock.
- Due to the size of this range hood, a two-person installation is recommended.

To reduce the risk of fire, electric shock, or injury to persons:

- For general ventilating use only. **DO NOT** use to exhaust hazardous or explosive materials and vapours.
- **WARNING**: To Reduce The Risk Of Fire Or Electric Shock, Do Not Use This Fan With Any Solid-State Speed Control Device.
- The combustion air flow needed for safe operation of fuel-burning equipment may be affected by this unit's operation. Follow the heating equipment manufacturer's guideline and safety standards such as those published by the National Fire Protection Association (NFPA), and the American Society of Heating, Refrigeration and Air Conditioning Engineers (ASHRAE), and other local code authorities.
- Before servicing or cleaning the unit, switch power off at service panel and lock the service
- Disconnecting means to prevent power from being switched on accidentally. When the service disconnecting means cannot be locked, securely fasten a prominent warning device, such as a tag, to the service panel.
- Clean grease-laden surfaces frequently. To optimize performance and to disperse air properly, make sure to vent air outside. DO NOT vent exhaust into spaces between walls, crawl spaces, ceilings, attics or garages.
- Ducted fans MUST always be vented to the outdoors.
- This unit MUST be grounded and used with metal ductwork only.
- Sufficient air is needed for proper combustion and exhausting of gases through the duct to prevent back drafting.
- When cutting or drilling into wall or ceiling, be careful not to damage electrical wiring or other hidden utilities.
- All electrical wiring must be properly installed, insulated and grounded.
- Old ductwork should be cleaned or replaced if necessary to avoid the possibility of a grease fire.
- Check all joints on ductwork to ensure proper connection; all joints should be properly taped using a certified aluminum or foil tape.
- Use this unit only in the manner intended by the manufacturer. If you have questions, contact the vendor.

READ AND SAVE THESE INSTRUCTIONS

Important Safety Information

WARNING: TO REDUCE RISK OF A RANGE TOP GREASE FIRE:

a) Never leave surface units unattended at high settings. Boilovers cause smoking and greasy spillovers that may ignite. Heat oils slowly on low or medium settings.

b) Always turn range hood ON when cooking at high heat or when flambéing food (i.e. Crepes Suzette, Cherries Jubilee, etc.).

c) Clean ventilating fans frequently. Grease should not be allowed to accumulate on fan or filter. Before servicing or cleaning unit, unplug and disconnect the hood from the power supply.

d) Use proper pan size. Always use cookware appropriate for the size of the surface element.

WARNING: TO REDUCE RISK OF INJURY TO PERSONS IN THE EVENT OF A RANGE TOP GREASE FIRE, OBSERVE THE FOLLOWING *

a) SMOTHER FLAMES with a close-fitting lid, cookie sheet, or metal tray, then turn off the burner. BE CAREFUL TO PREVENT BURNS. If the flames do not go out immediately, EVACUATE AND CALL THE FIRE DEPARTMENT.

b) NEVER PICK UP A FLAMING PAN - You may be burned.

c) DO NOT USE WATER, including wet dishcloths or towels - a violent steam explosion will result.

d) Use an extinguisher ONLY if:

1) You know you have a Class A, B, C extinguisher, and you already know how to operate it.

2) The fire is small and contained in the area where it is started.

3) The fire department is being called.

4) You can fight the fire with your back to an exit.

* Based on “Kitchen Fire Safety Tips” published by NFPA

To reduce the risk of injury to persons in the event of a gas leaks:

- Extinguish any open flame.
- DO NOT turn on the lights or any type of appliance.
- Open all doors and windows to disperse the gas. If you still smell gas, call the gas company and fire department.

Your safety and the safety of others is very important. We have provided many important safety messages in this manual and on your appliance. Always read and obey all safety messages. All safety messages outline any potential hazards, how to reduce the chance of injury, and possible risks if the instructions are not followed.

READ AND SAVE THESE INSTRUCTIONS

Included Parts

Hardware Note: For safety reasons, range hood mounting screws and anchors will not be included due to the variation of cabinetry constructions and wall material. Please consult your installation specialist regarding the optimal type of mounting screws and wall anchors to suit your home's construction.

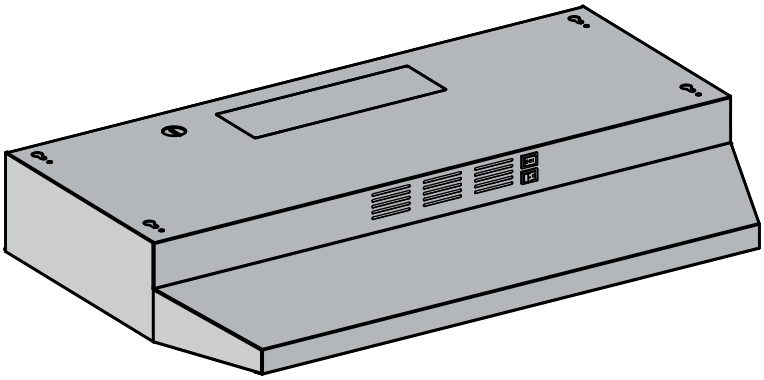

Range Hood

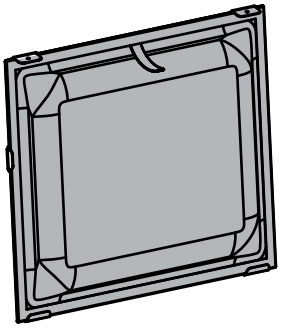

Filter

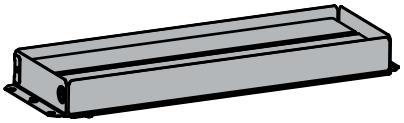

Rectangular Vent/Damper

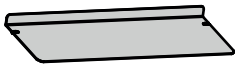

Panel piece

4 + 1 Screws

Range Hood Dimensions

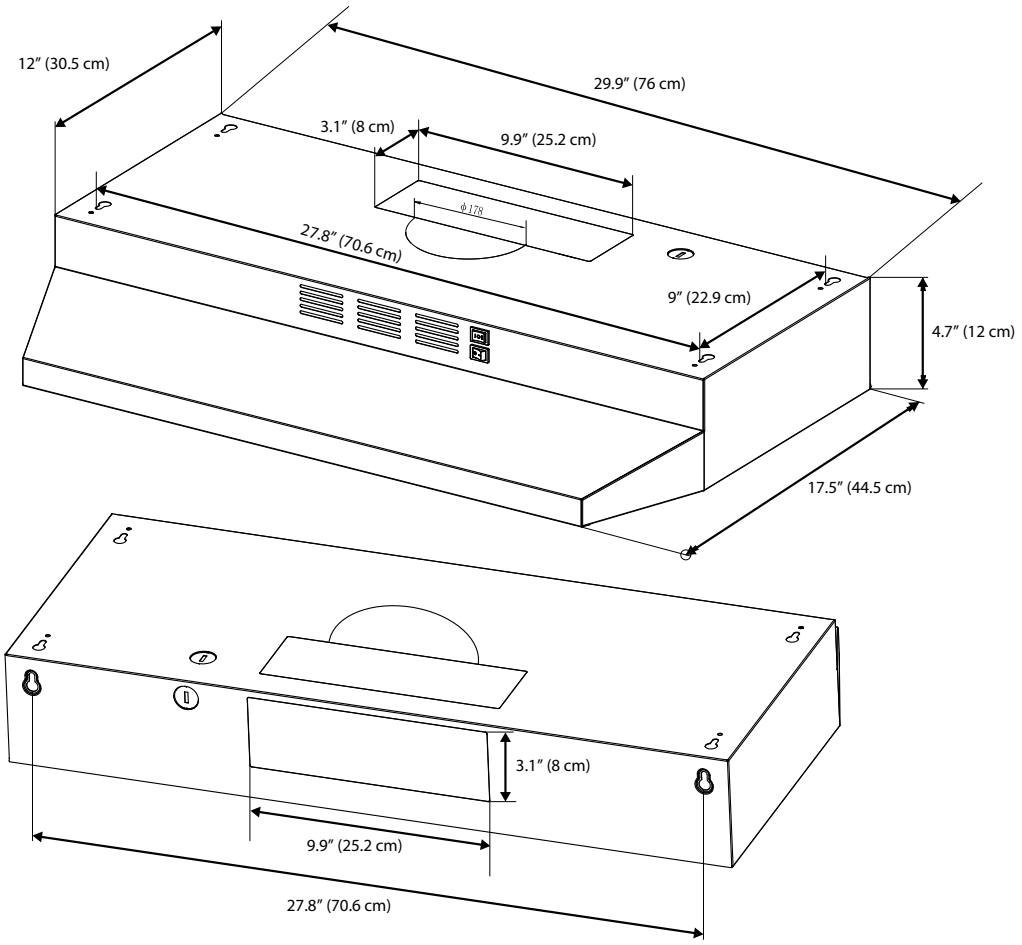

Specifications

Body Design	Stainless Steel	
Power Rating	120 V / 60 Hz (cETLus Certified)	
Model number	OV-1031 / OV-1032	OV-1011R / OV-1012RWH
CFM	175	225
Speed Control Levels	2 Speeds	
Interference Protection	Radio Frequency Interference Protected	
Motors	Single Motor	
Controls	Rocker switch	
Filtration	Aluminium filter with charcoal cotton sheet	
Lighting	1 × 2 W LED	
Venting Size	3 1/4 × 10 inches (8.3 cm × 25.4 cm) rectangle, top or rear, or purchase separately top 7 inches (17.8 cm) round	

Installation

STEP 1
Read the Safety Instructions

- It is very important to read the safety instructions on pages 4 and 5.

IMPORTANT: It is the installer's responsibility to comply with installation clearances.

STEP 2
Unpack Range Hood and Prepare Tools

- Carefully unpack the range hood and parts. Make sure all parts are included as shown on page 6.
- DO NOT remove the protective film covering the appliance until the installation is fully completed.
- Consult a qualified and trained installer or check local codes for makeup air requirement, if any.

STEP 3
Plan Desired Location

- Plan a desirable location that fits all requirements in the Safety and Installation sections of this manual. Plan where and how the ductwork will be installed.
- A straight or short duct run will allow the unit to perform most efficiently. Long duct runs, elbows and transitions will reduce the performance of the unit. Each elbow is equivalent to 5 to 10 feet (1.5 m to 3 m) of straight run.
- If ductwork is already installed: ensure ductwork is free from debris.

STEP 4
Test Unit Functions

- Plug the unit in and test all of the functions before installing.
- Place the range hood on a flat, stable surface. Connect the range hood to a designated standard outlet (120-Volt, 60Hz, AC only) and turn on the range hood. Verify all operations of the range hood by referring to *Range Hood Operations.*
- Turn power On in control panel.
- Check all lights and fan operations.

WARNINGS:
- Please make sure to read ALL safety instructions on pages 4 and 5.
- Use two or more people to move and install range hood.
- Failure to follow these instructions can result in serious injury.

STEP 5
Venting Installation Guidelines

- The following steps are for exterior ventilation.

IMPORTANT:
- Vent system must terminate to the outside (roof or side wall).
- DO NOT terminate the vent system in an attic or other enclosed area.
- DO NOT use 4 in (10.2 cm) laundry-type wall caps.
- Use metal/aluminum vent only. A rigid metal/aluminum vent is recommended.
- DO NOT use a plastic vent.
- Always keep the duct clean to ensure proper airflow.
- Calculate the following figures before installation:
  1. Distance from the floor to the ceiling
  2. Distance between the floor and the countertop/stove
  3. A distance of 24 in to 30 in (61 cm to 76.2 cm) is recommended between stove top and the bottom of range hood. 30 in (76.2 cm) minimum is required for gas stove tops.
  4. Height of hood and duct cover.

For the most efficient and quiet operation:
- It is recommended that the range hood be vented vertically through the roof through 7 in. (17.8 cm) round, or through the roof or wall 3-1/4 × 10 in. (8.3 cm × 25.4 cm) rectangular duct or bigger metal/aluminum vent work.
- The size of the vent should be uniform.
- Use no more than three 90° elbows.
- Make sure there is a minimum of 24 in (61 cm) of straight vent between the elbows if more than one elbow is used.
- DO NOT install two elbows together.
- The length of vent system and number of elbows should be kept to a minimum to provide efficient performance.
- The vent system must have a damper. If roof or wall cap has a damper, you may remove damper flaps from damper to increase air flow.
- Only one flange is needed in the air duct system, either on top of the motor or outside.
- Use silver tape or duct tape to seal all joints in the vent system.
- Use caulking to seal exterior wall or roof opening around the cap.

Height and Clearance

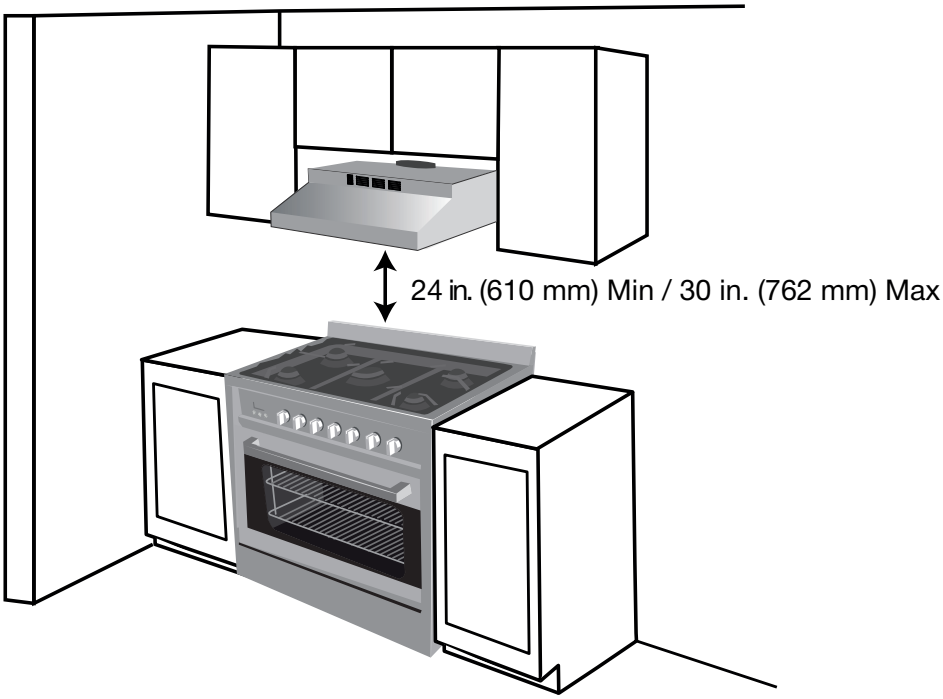

Installation

IMPORTANT:

- A minimum of 7 in. (17.8 cm) round or 3-1/4 × 10 in. (8.3 cm × 25.4 cm) rectangular duct must be used to maintain maximum airflow efficiency.
- Always use rigid type metal/aluminum ducts if available to maximize airflow when connecting to provided duct.
- Please use Duct Run Calculation below to compute total available duct run when using elbows, transitions and caps.
- ALWAYS, when possible, reduce the number or transitions and turns. If long duct run is required, increase duct size from 7 in. (17.8 cm) to 8 in. (20.3 cm) If a reducer is used, install a long reducer instead of a pancake reducer. Reducing duct size will restrict airflow and decrease airflow, thus reduce duct size as far away from opening as possible.
- If turns or transitions are required, install as far away from opening and as far apart, between two (2), as possible.
- Minimum mount height between stove top to hood bottom should be no less than 24-inch (61 cm) for electric cook tops and minimum of 30-inch (76.2 cm) for gas stove tops and no higher than 30-inch (76.2 cm) for electric cook tops.
- It is important to install the hood at the proper mounting height. Hoods mounted too low could result in heat damage and fire hazard; while hoods mounted too high may be hard to reach and will lose its performance and efficiency.
- If available, also refer to stove top manufacturer's height clearance requirements and recommended hood mounting height above range.

Duct Run Calculation:	
Recommended maximum run	
7 in. (17.8 cm) 3 1/4 x 10 in. (8.3 x 25.4 cm) duct	30 ft (9.1 m)
Vent piece deduction	
Each 90º elbow used	9 ft (2.7 m)
Each 45º elbow used	5 ft (1.5 m)
Each 6 in. to 3-1/4 x 10 in. transition used	7 ft (2.1 m)
Side wall cap with damper	0 ft (0 m)

Duct Run Calculation example:

One roof cap, two 90º elbows, and one 45º elbow use.

0ft + 9ft + 9ft + 5ft = 23ft used.

Deduct 23ft from 30ft, 7ft maximum available for straight duct run.

- This range hood is factory set for venting through the roof or wall.
- Vent work can terminate either through the roof or wall. To vent through a wall, a 90° elbow is needed.

IMPORTANT:

- **NEVER exhaust air or terminate duct work into spaces between walls, crawl spaces, ceiling, attics or garages. All exhaust must be ducted to the outside.**
- Use metal/aluminum duct work only.
- Fasten all connections with sheet metal screws and tape all joints with certified Silver Tape or Duct Tape.
- Use caulking to seal exterior wall or roof opening around the cap.

TOP VENTING
ROOF EXHAUST

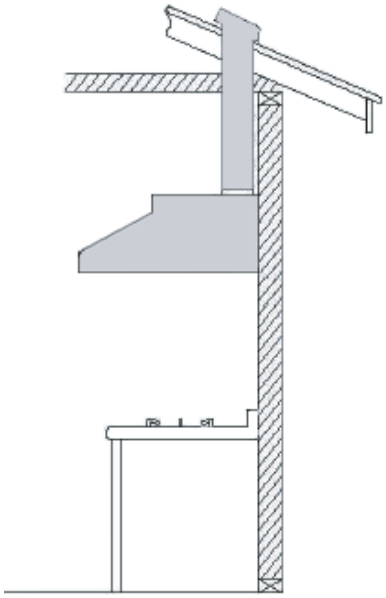

TOP VENTING
WALL EXHAUST

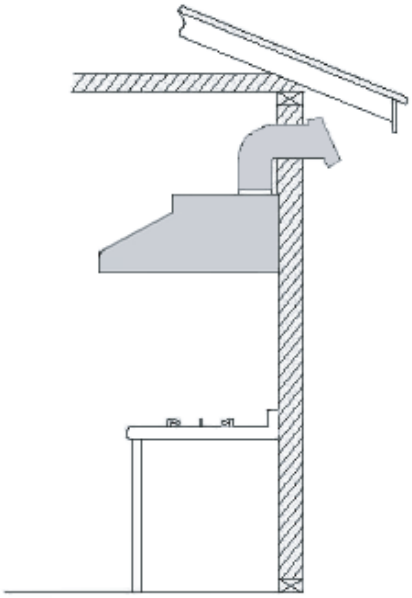

REAR VENTING

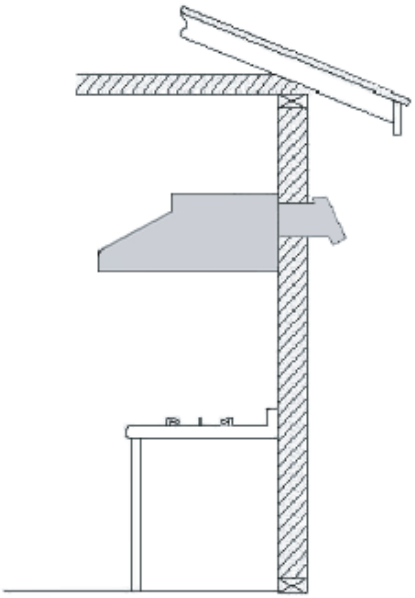

STEP 6
Preparations

NOTE: To avoid damage to your hood, prevent debris from entering the vent opening.

- Determine and mark the center line on the ceiling or wall where the range hood will be installed.
- Make sure there is proper clearance within the ceiling or wall for exhaust vent.
- Due to the weight and size of this unit, please make sure that the support system or framework being used is stable and secure in the ceiling or wall.
- Put a thick, protective covering over countertop, cooktop or range to protect from damage or dirt.
- Remove any hazardous objects around the area when installing.

CAUTION

If moving the cooking range is necessary to install the hood, turn OFF the power on an electric range at the main electrical box. SHUT OFF THE GAS BEFORE MOVING A GAS RANGE.

STEP 7
Remove Accessories

- Unscrew and remove corner bead located underneath the hood (see Figure 1).
- Unscrew the rectangular damper located underneath the hood, by removing top screws (see Figure 2).
- Use a tool to punch the wiring hole, from the two options for holes. Please choose hole A or hole B according to wiring requirement (see Figure 3).

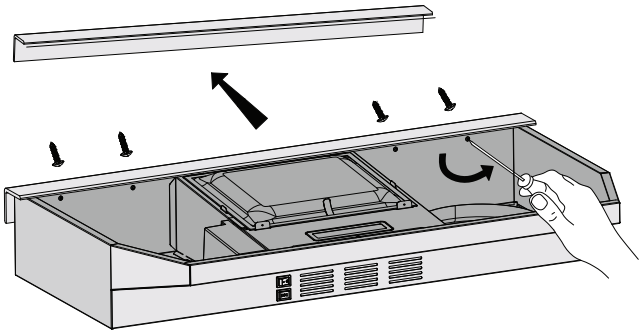

Figure 1

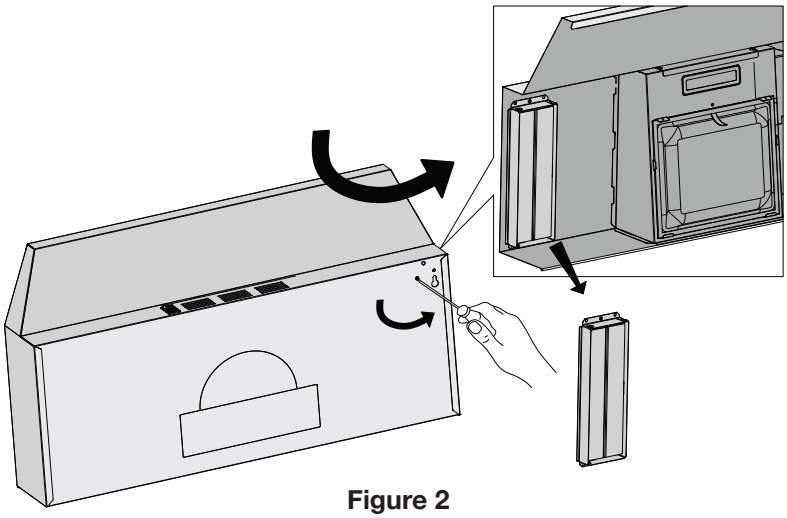

Figure 2

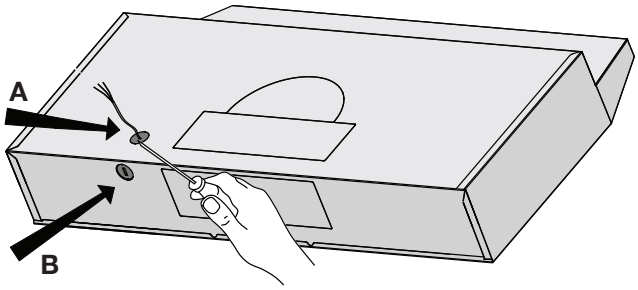

Figure 3

- **For external ventilation, please follow step 8.**
- **For internal re-circulation, please follow step 9.**

STEP 8 (External Ventilation Only)
Attaching Vent/Damper and Panel Piece

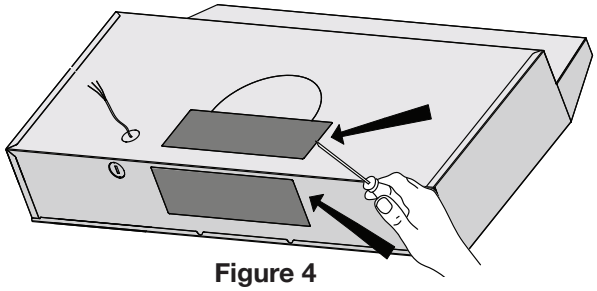

Figure 4

- Depending on the exterior venting option chosen (see page 10), pop out the steel panel on either the top or rear of the range hood (see Figure 4).
- Using the supplied screws, attach the rectangular vent/damper on either the top or rear of the range hood (see Figure 5A or 5B).
- **If using top round 7 in. (17.8 cm) ducting, please purchase OVO 7 in. (17.8 cm) damper OV-DA-2001 Sold separately.**

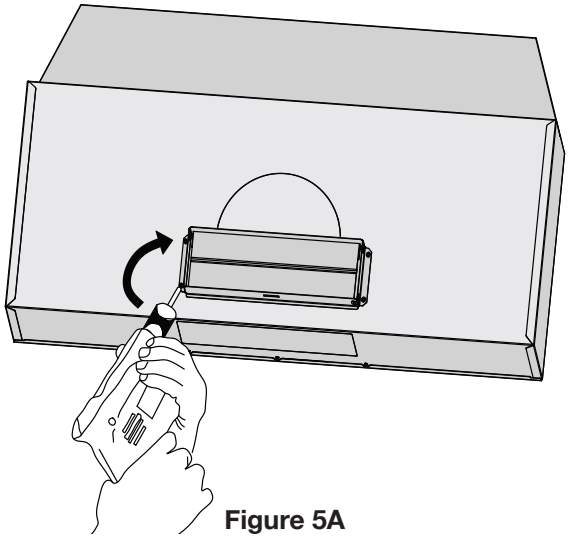

Figure 5A

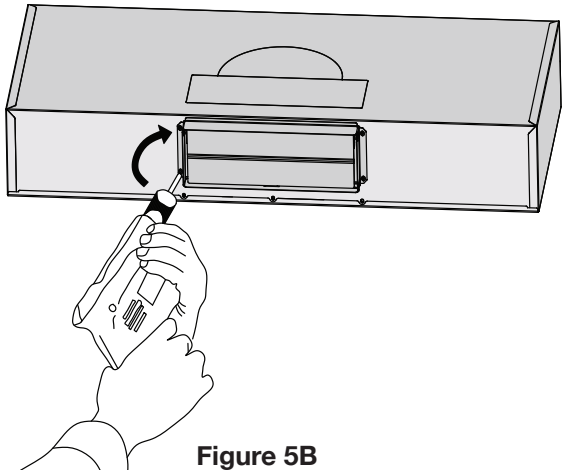

Figure 5B

- Take out the panel piece from the hardware bag.
- Insert the “panel piece” into the hood as shown on Figure 6.

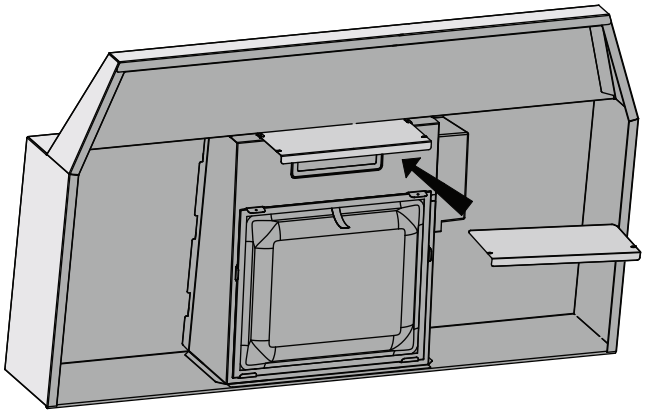

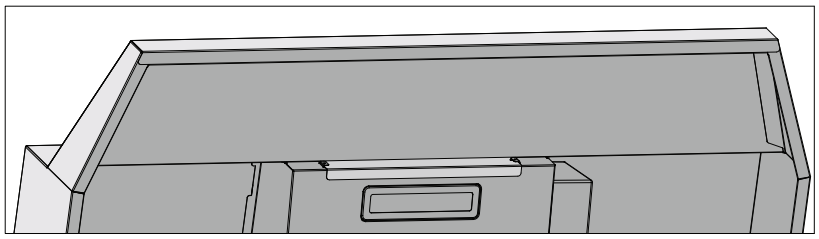

Figure 6

STEP 9
Electrical Connection

- Depending if using the wiring hole A or hole B, connect cable to range hood wiring (see Figure 7).
- Connect BLACK to BLACK, WHITE to WHITE and GREEN to GREEN (see Figure 8).
- **DON'T FORGET TO CONNECT THE GROUND! (green wire)**

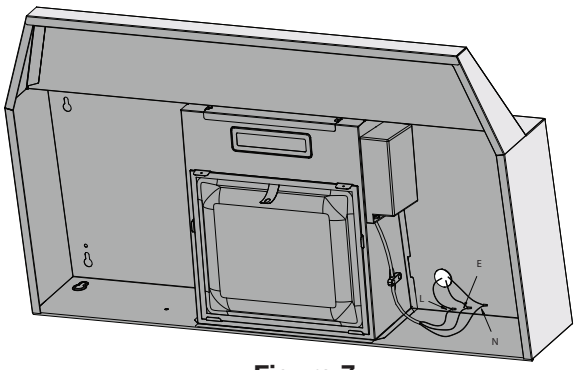

Figure 7

SAFETY WARNING: Risk of electrical shock. This range hood must be properly grounded. Make sure this is done by a qualified electrician in accordance with all applicable national and local electrical codes. Before connecting wires, switch power off at service panel and lock service panel to prevent power from being switched on accidentally.

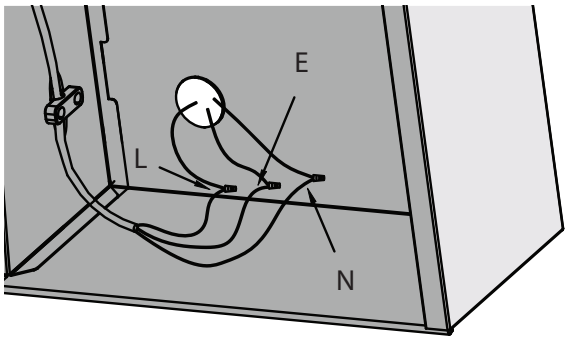

Figure 8

IMPORTANT:

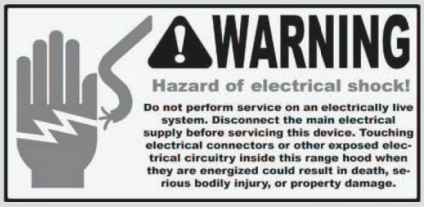

- Observe all governing codes and ordinances.
- **It is the customer's responsibility to contact a qualified electrical installer.**
- If codes permit and a separate ground wire is used, it is recommended that a qualified electrician determine that the ground path is adequate. A 120-Volt, 60 Hz, AC-only, fused electrical supply is required on a separate 15-amp circuit, fused on both sides of the line.
- DO NOT ground to a gas pipe.
- Check with a qualified electrician if you are not sure that the range hood is properly grounded.
- DO NOT have a fuse in the neutral or ground circuit.

IMPORTANT: Save this Installation Guide for electrical inspector's use.

GROUNDING INSTRUCTIONS:

- This appliance must be grounded. In the event of an electrical short-circuit, grounding reduces the risk of electric shock by providing an escape wire for the electric current.

WARNING: Improper grounding can result in a risk of electric shock.

- Consult a qualified electrician if the grounding instructions are not completely understood, or if doubt exists as to whether the appliance is properly grounded. DO NOT use an extension cord. If the power supply cord is too short, have a qualified electrician install an outlet near the appliance.
- The range hood must be connected with copper wire/plug only. The range hood should be connected directly to the fused disconnect (or circuit breaker) box through flexible armored or non-metallic sheathed copper cable. UL/CSA listed strain relief must be provided at each end of the power supply cable. Use only with range hood cord-connection kits that have been investigated and found acceptable for use with this model.

- **For wall installation, please follow step 10A.**
- **For cabinet installation, please follow step 10B.**

STEP 10A
Wall installation

- Mark or drill a small hole on the mounting position according to the dimensions on Figure 9.
- Insert suitable screws into the holes.
- Hang the range hood onto the screws.

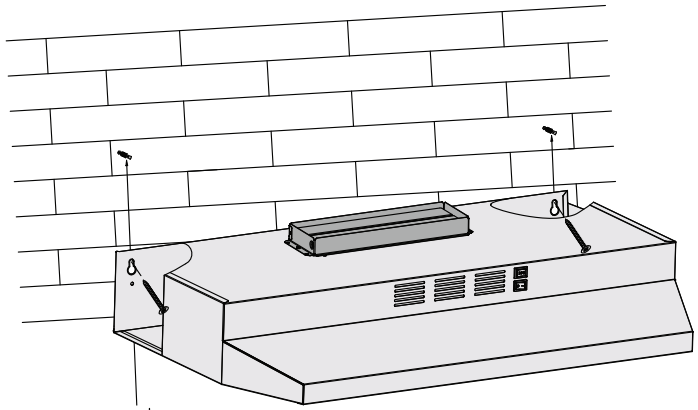

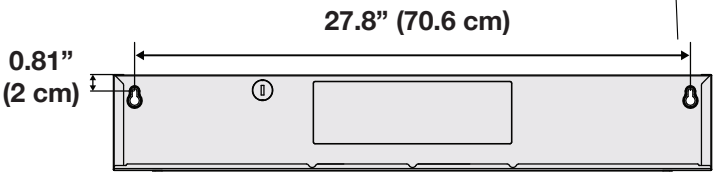

Figure 9

STEP 10B
Under the cabinet installation

- Mark or drill a small hole on the mounting position according to the space and dimensions cited on Figure 10.
- Install the hood under the cabinet using suitable screws to fix in position.

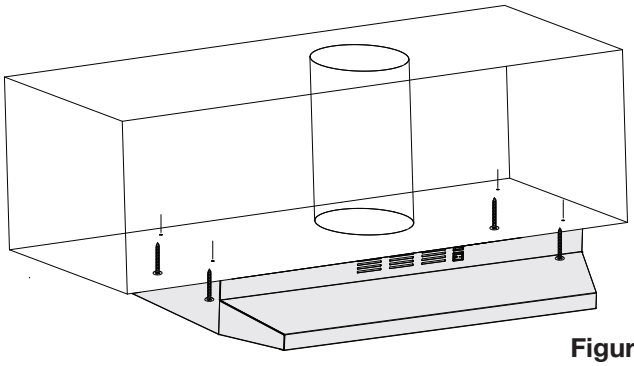

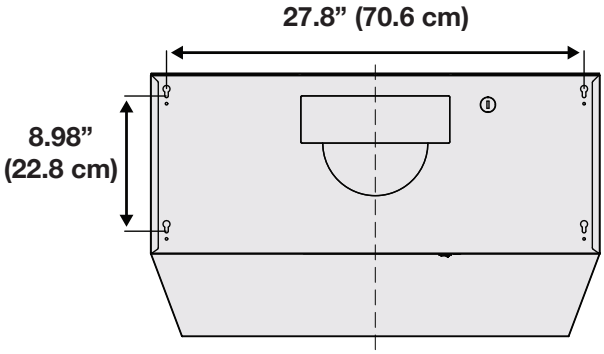

Figure 10

STEP 11 (External Ventilation Only)
Venting

- Depending on exterior ventilation chosen (see page 10), either exit the ducting through the ceiling or wall.
- Always use rigid type metal/aluminum duct tube (follow the building codes in your area) to maximize airflow. Make sure that the backdraft flaps can open, to allow maximum airflow. Connect the duct tube to the vent/damper and securely seal with certified aluminum or foil tape so that it is airtight. Please check the building codes in your city to learn which tape product is recommended.

Range Hood Assembly

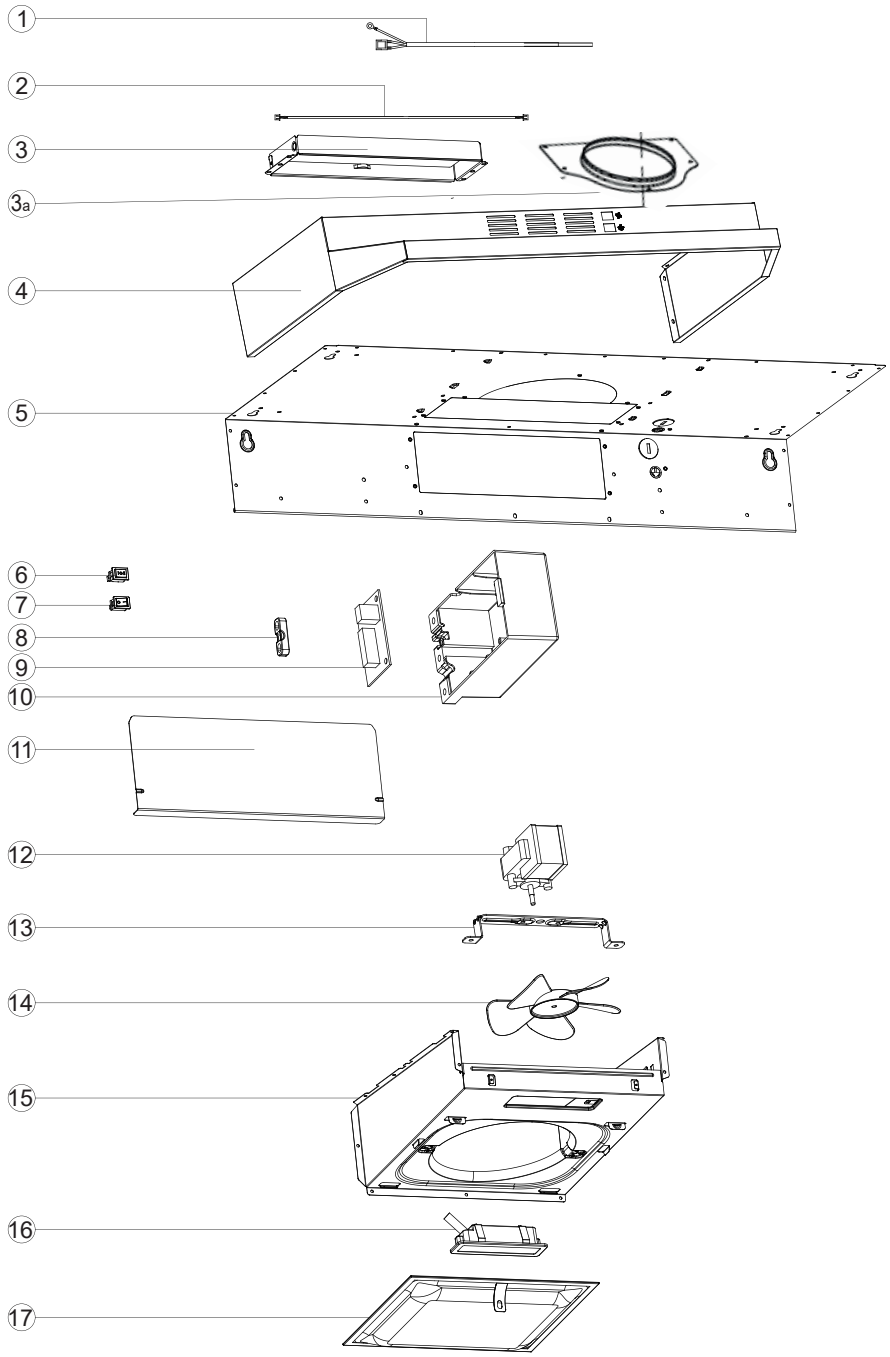

NO.	PART NAME
1	US cord
2	switch wire
3	damper
3a	round damper optional
4	body
5	top & rear
6	speed rocky switch
7	LED rocky switch
8	clamp
9	PCB
10	electric supply box
11	panel piece
12	motor
13	bracket
14	impeller
15	housing
16	LED light
17	aluminum filter

Circuit Diagram

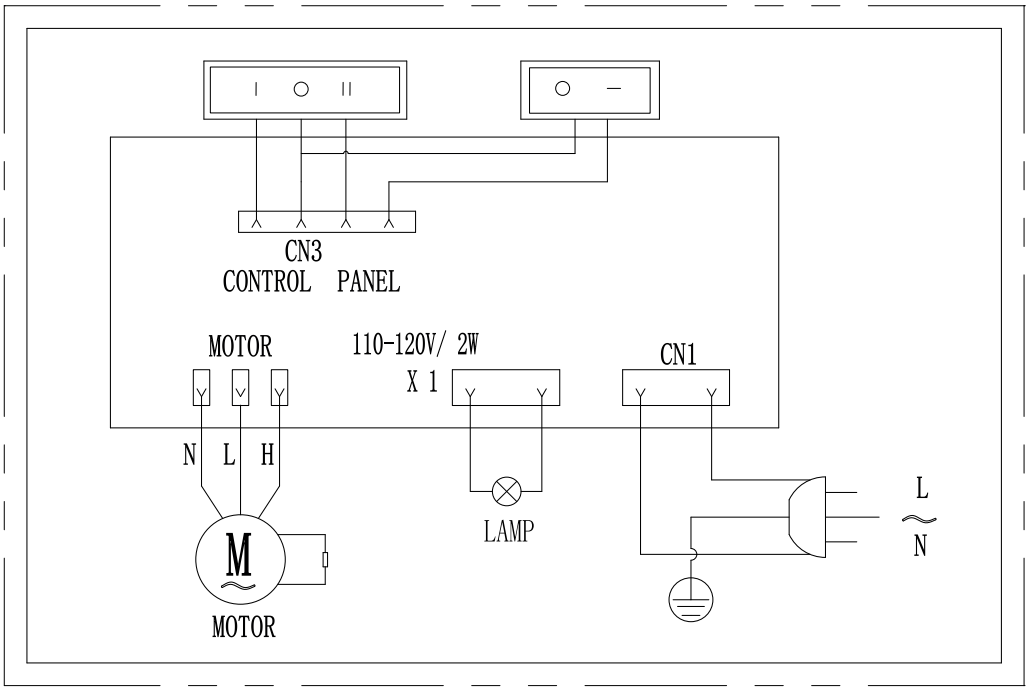

Blower Assembly

Number	Part
1	Motor
2	Bracket
3	Impeller
4	Housing

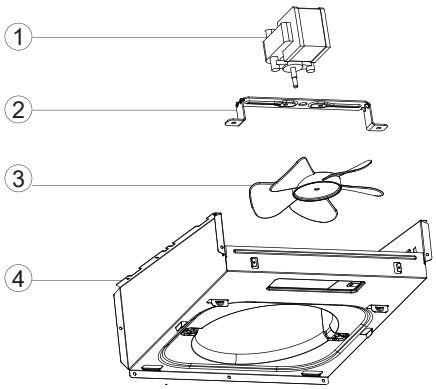

Electrical Assembly

Number	Part
1	PCB
2	Electric supply box

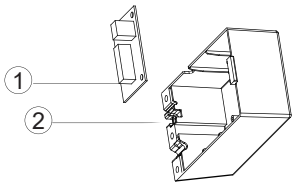

Operation

Speed button

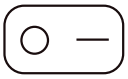

Light button

Power

1. Press I for low speed.
2. Press II for high speed.
3. Position the rocker switch to the middle position to turn off.

Light

1. Press I to turn on the light.
2. Press O to turn off the light.

Troubleshooting

Problem	Possible Cause
If the range hood or LED light does not operate after installation:	Check if the range hood has been plugged in, make sure that all power has been turned back ON, fused not blown and all electrical wiring are properly connected.
The range hood vibrates when the blower is on:	The range hood might not have been secured properly on to the ceiling or wall.
The blower or fan seems weak:	Check that the duct sized used is at least 7 in. (17.8 cm) or 3 1/4 × 10 in. (8.3 × 25.4 cm). Range hood WILL NOT function efficiently with insufficient duct size. For example: 7 in. (17.8 cm) duct over 6 in. (15.3 cm) hole and loosely secured.
	Check if duct is clogged or if damper unit (half-circular flange) is not installed correctly or opening properly. A tight mesh on a side wall cap unit might also cause restriction to the air flow.
The lights work but the fan is not spinning at all, is stuck or is rattling:	The fan might be jammed or scraping the bottom due to shipping damage. Please contact us immediately.
The hood is not venting out properly:	Make sure the distance between the stove top and the bottom of the hood is within 24 in. and 30 in. (61 and 76.2 cm) in distance.
	Reduce the number of elbows and length of duct work. Check if all joints are properly connected, sealed, and taped.

For more troubleshooting or F.A.Q. Please, scan the below QR code or visit our website at:

Canada

myovo.ca/trouble_shooting

USA

myovo.net/trouble_shooting

Range Hood Cleaning

Proper maintenance of the Range Hood will ensure proper performance of the unit.

Use a warm detergent solution. Grease filters are dishwasher safe.

Stainless steel is one of the easiest materials to keep clean. Occasional care will help preserve its appearance.

Cleaning tips:

- Hot water with soap or detergent is all that is usually required.
- Follow all cleaning by rinsing with clear water. Wipe dry with a clean, soft cloth to avoid water marks.
- For discolorations or deposits that persist, use a non-scratching household cleanser or stainless steel polishing powder with a little water and a soft cloth.
- For stubborn cases, use a plastic scouring pad or soft bristle brush with cleanser and water. Rub lightly in direction of polishing lines or “grain” of the stainless finish. Avoid using too much pressure, which may mar the surface.
- DO NOT allow deposits to remain on surface for long periods of time.
- DO NOT use ordinary steel wool or steel brushes. Small bits of steel may adhere to the surface causing rust.
- DO NOT allow salt solutions, disinfectants, bleaches, or cleaning compounds to remain in contact with stainless steel for extended periods. Many of these compounds contain chemicals which may be harmful. Rinse with water after exposure and wipe dry with a clean cloth.

Painted surfaces should be cleaned with warm water and mild detergent only.

Replacing the Light

Canada

Scan this QR code to purchase replacement lights

USA

Scan this QR code to purchase replacement ligths

IMPORTANT:

ALWAYS SWITCH OFF THE ELECTRICITY SUPPLY AT THE MAIN PANEL BEFORE CARRYING OUT ANY OPERATION ON THE APPLIANCE.

1. Make sure the range hood is unplugged or turn OFF breaker.

2. Open the wiring compartment with a Phillips screwdriver, and unplug the light (Figure 11). Gently use screwdriver to push down until light pops out from its location. Pull out the LED light.

CAUTION: LIGHT MAY BE HOT, PLEASE TAKE OUT THE LIGHT WHEN THE LIGHT IS COMPLETELY COOL!

3. Replace with appropriate LED, light (12 V, 2 W Max). Please contact OVO customer service for replacement. Plug in new light and push back into light panel.

4. Turn ON breaker and range hood to test for operation.

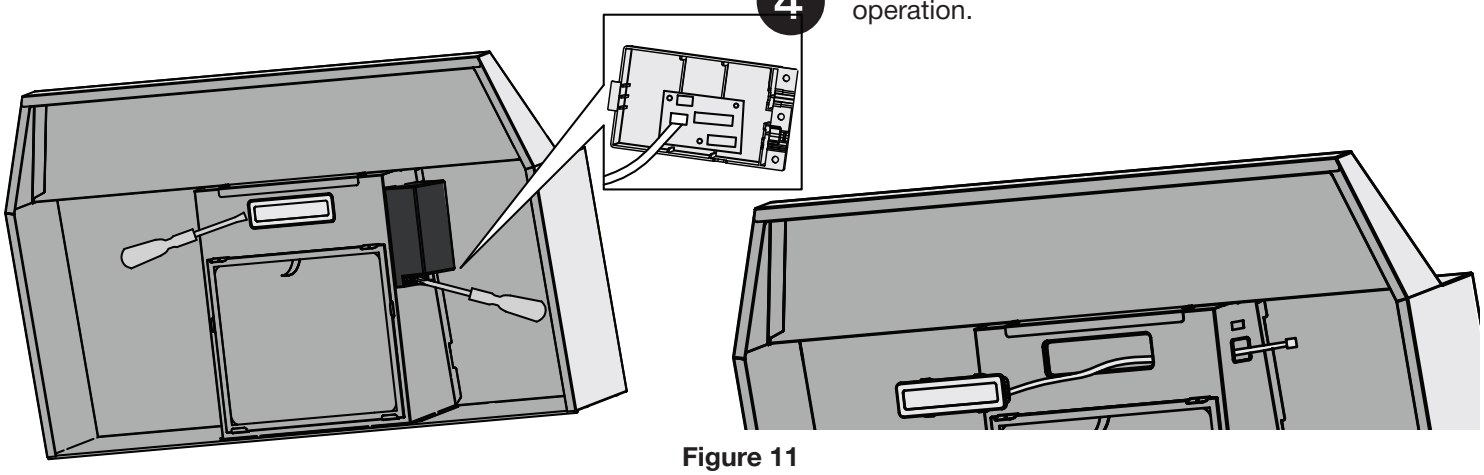

Figure 11

Operations

- Read and understand all instructions and warnings in this manual before operating the appliance. Save these instructions for future reference.
- Always leave safety grills and filters in place. Without these components, operating fans could catch on to hair, fingers and loose clothing.
- NEVER dispose cigarette ashes, ignitable substances, or any foreign objects into fans.
- NEVER leave cooking unattended. When frying, oil in the pan can easily overheat and catch fire. The risk of self combustion is higher when the oil has been used several times.
- NEVER cook on “open” flames under the range hood. Check deep-fryers during use; superheated oil may be flammable.

Cleaning

- The saturation of greasy residue in the fan and filters may cause increased inflammability. Keep unit clean and free of grease and residue build-up at all times to prevent possible fires.
- Filters must be cleaned periodically and free from accumulation of cooking residue (see Cleaning Instructions below). Old and worn filters must be replaced immediately.
- DO NOT operate fans when filters are removed. Never disassemble parts to clean without proper instructions. Disassembly is recommended to be performed by qualified personnel only. Read and understand all instructions and warnings in this manual before proceeding.

SAFETY WARNING: Never put your hand into area housing the fan while the fan is operating!

For optimal operation, clean range hood and all baffle/spacer/filter/grease tray/oil container regularly. Regular care will help preserve the appearance of the range hood.

Cleaning Exterior Surfaces

- Clean periodically with hot soapy water and clean cotton cloth. DO NOT use corrosive or abrasive detergent (e.g. Comet Power Scrub®, EZ-O ff® oven cleaner), or steel wool/scoring pads, which will scratch and damage the stainless steel surface. For heavier soil use liquid degrease such as “Formula 409®” or “Fantastic®” brand cleane r.
- If hood looks splotchy (stainless steel hood), use a stainless steel cleaner to clean the surface of the hood. Avoid getting cleaning solution onto or into the control panel. Follow directions of the stainless steel cleaner. **CAUTION: DO NOT leave on too long as this may cause damage to hood finish.** Use soft towel to wipe off the cleaning solution, gently rub off any stubborn spots. Use dry soft towel to dry the hood.
- After cleaning, you may use non-abrasive stainless steel polish such as 3M® or ZEP®, to polish and bu ff out the stainless luster and grain. Always scrub lightly, with clean cotton cloth, and with the grain.
- DO NOT allow deposits to accumulate or remain on the hood.
- DO NOT use ordinary steel wool or steel brushes. Small bits of steel may adhere to the surface and cause rusting.
- DO NOT allow salt solutions, disinfectants, bleaches, or cleaning compounds to remain in contact with stainless steel for extended periods. Many of these compounds contain chemicals, which may be harmful.
- Rinse with water after exposure to these compounds and wipe dry with a clean cloth.

Canada

Scan this QR code to purchase replacement filters

USA

Scan this QR code to purchase replacement filters

USA: www.myovo.net
Canada: www.myovo.ca

+1-800-776-7891

TO REGISTER YOUR WARRANTY:

USA: myovo.net/register
Canada: myovo.ca/registrer

TO PURCHASE NEW BAGS AND FILTER

USA: myovo.net/product-category/bags-and-filter
CANADA: myovo.ca/product-category/bags-and-filter

2044 Autoroute 440 Ouest, Laval, QC, H7S 2M9

Intertek

UM1011R/12RWH